TI Motor Driver – Safer, Greener, Smarter
德儀馬達驅動器 – 更安全，更環保，更智能

TANG, Zhao / 唐釗
Motor Application Team / 馬達應用團隊
Texas Instruments / 德州儀器
Sept 2012 / 二零一二年九月

TI Spins Motors

Texas Instruments

Smarter. Safer. Greener.

What's required to spin a motor nowadays?
現在對馬達驅動有哪些新要求？

Safer
更安全

Stable operation and low failure rate
運行穩定，故障率低

Greener
更環保

Improved efficiency and low power consumption
高效率，低功耗

Smarter
更智能

Advanced algorithm, easy to use
算法先進，易於使用

What's good about TI's motor drivers?
TI的馬達驅動產品有哪些優勢？

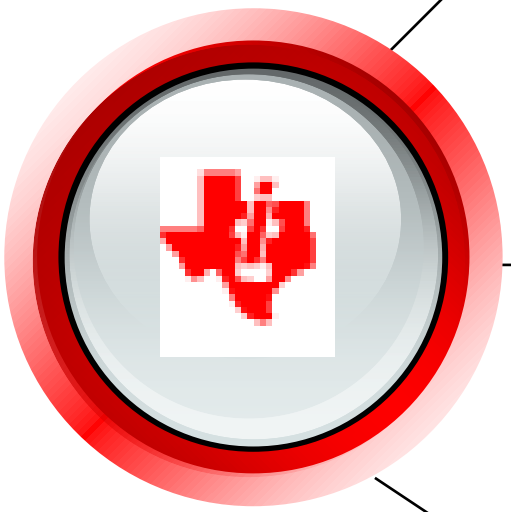

- Fully experienced and highly reliable
  豐富經驗，高度可靠
- Advanced technology and low power dissipation
  先進工藝與低功耗
- Advanced algorithm and fully supported
  先進算法，支持完善

Safer
更安全

Greener
更環保

Smarter
更智能

What's good about TI's motor drivers?
TI的馬達驅動產品有哪些優勢？

- Fully experienced and highly reliable
  豐富經驗，高度可靠
- Advanced technology and low power dissipation
  先進工藝與低功耗
- Advanced algorithm and fully supported
  先進算法，支持完善

Safer
更安全

Greener
更環保

Smarter
更智能

Fully experienced/豐富經驗

Genesis of TI motor driver offerings/德儀馬達驅動器產品簡介

- TI in motor driver market for >15 years/持續銷售超過15年
- >1Bu motor driver shipped/累計產品銷售超過10億顆
- Widely used (in the form of custom engagements) in HDD, ODD, Inkjet printers, Digital still cameras, & Automotives/以客戶定制的形式廣泛應用於硬碟、光驅、噴墨打印機、數位相機、汽車工業等行業中
- TI entered mass market in 2010 with the formation of Motor Drive Business Unit (MDBU)/德儀在2010年成立了馬達驅動事業部(MDBU)，開始進軍大眾市場

Highly reliable/高度可靠

更安全

Fully integrated solutions
高度整合的解決方案

- Reduced PCB space/BOM
  減小PCB尺寸，縮減BOM
- Improved reliability
  可靠性提升
- No discrete design required
  無需分立方案設計

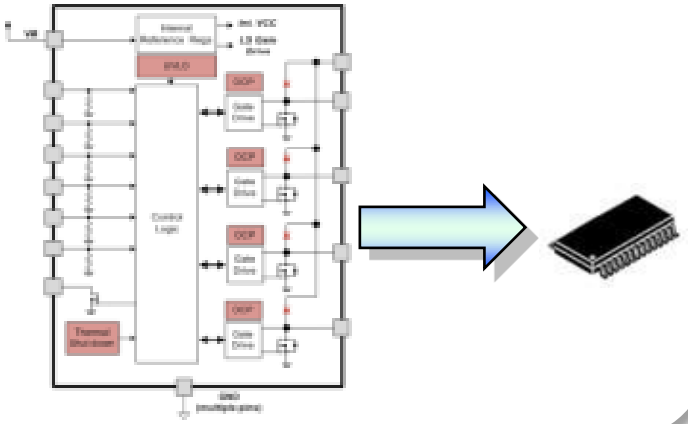

Robust & fully protected
萬全保護

- Over current / short protection
  過流 / 短路保護
- Thermal protection
  過熱保護
- Under voltage lock-out
  欠壓閉鎖
- Shoot-through protection
  擊穿保護

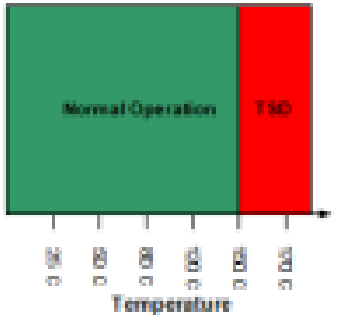

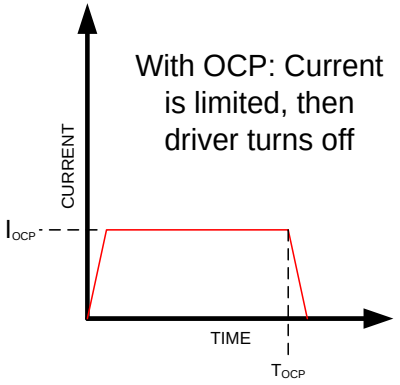

But I've got discrete solution already?
可是我已經有離散解決方案了呀？

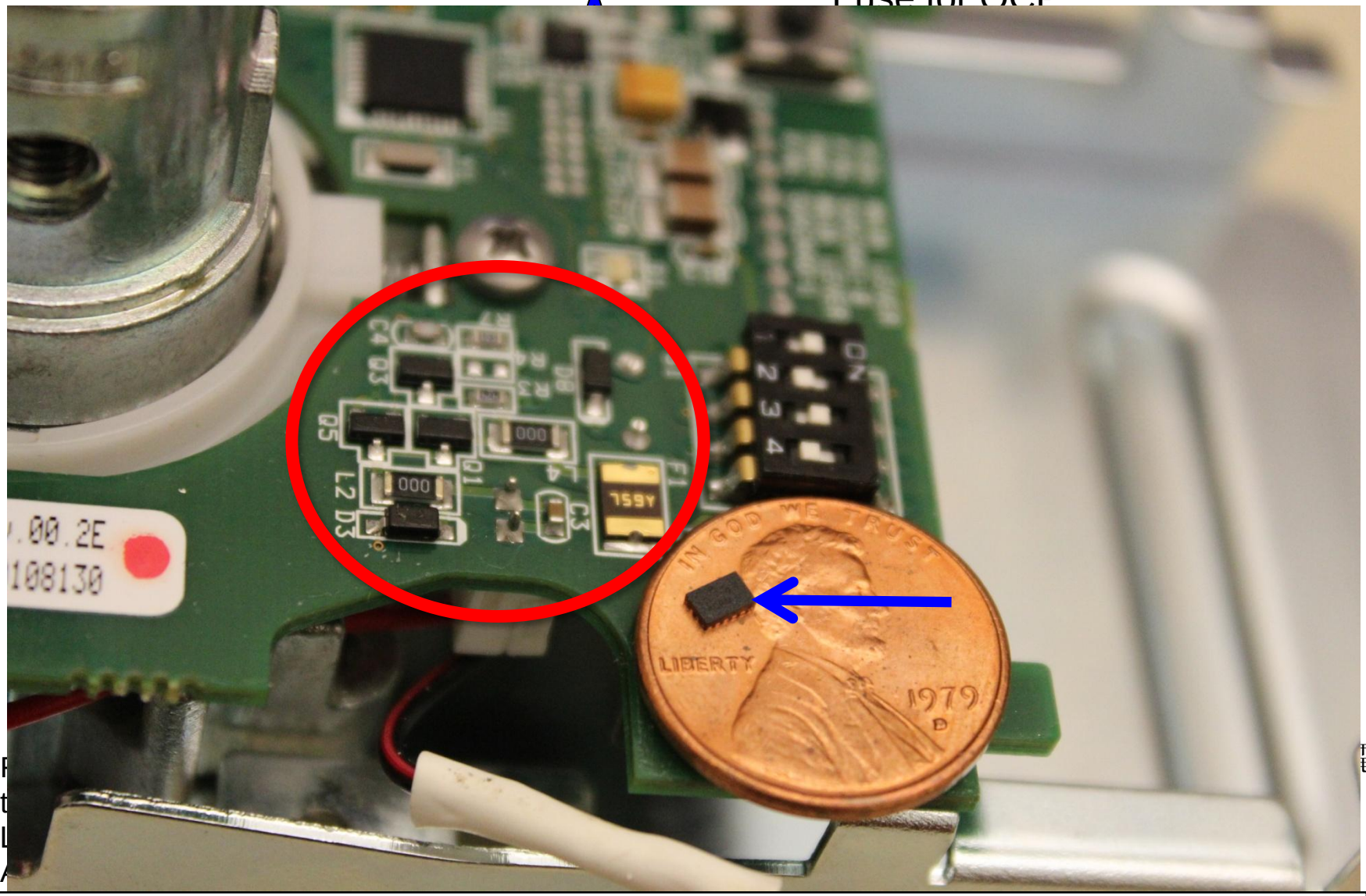

DRV8837:1.8A Low Voltage Brushed DC Motor Driver
DRV8837：1.8A低電壓直流有刷馬達驅動器

更安全

Features

- Single H-Bridge motor driver
  - Dual supplies:Vm = 1.8 to 11V
    Vcc = 1.8 to 7.0V
  - Output current: 1.8A cont / 1.8A peak
  - RDSON :280mΩ (LS + HS)
- PWM control interface (IN/IN)
- Brake support
- Sleep mode operation (35nA @ 5V)
- Tiny 2 x 2mm package
- Integrated protection features including over-current, thermal, shoot-through and UVLO protection

特性

- 單H橋接驅動器
  - 馬達/邏輯雙電源:Vm = 1.8~11V
    Vcc = 1.8~7.0V
  - 輸出電流:1.8A cont / 1.8A peak
  - RDSON:280mΩ (LS + HS)
- PWM型控制接口 (IN/IN)
- 支馬達制動
- 支持休眠模式 (35nA @ 5V)
- 2 x 2mm封裝
- 整合過流保護、過壓保護、直通保護、欠壓鎖定等等保護機制

Applications/應用範圍

- Battery-powered consumer products/電池供電類消費電子
- Low voltage solenoids& relays/低壓螺線管&繼電器
- Portable medical devices/可攜式醫療設備
- Toys/玩具
- E-locks/電子鎖

2.0 x 2mm, 8-pin
WSON package

2.0 x 2mm, 8管腳
WSON封裝

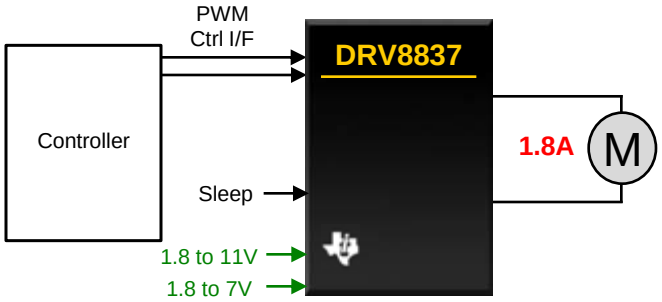

Selective Disclosure

TEXAS INSTRUMENTS

DRV8837 Functional Block Diagram
DRV8837原理圖

更安全

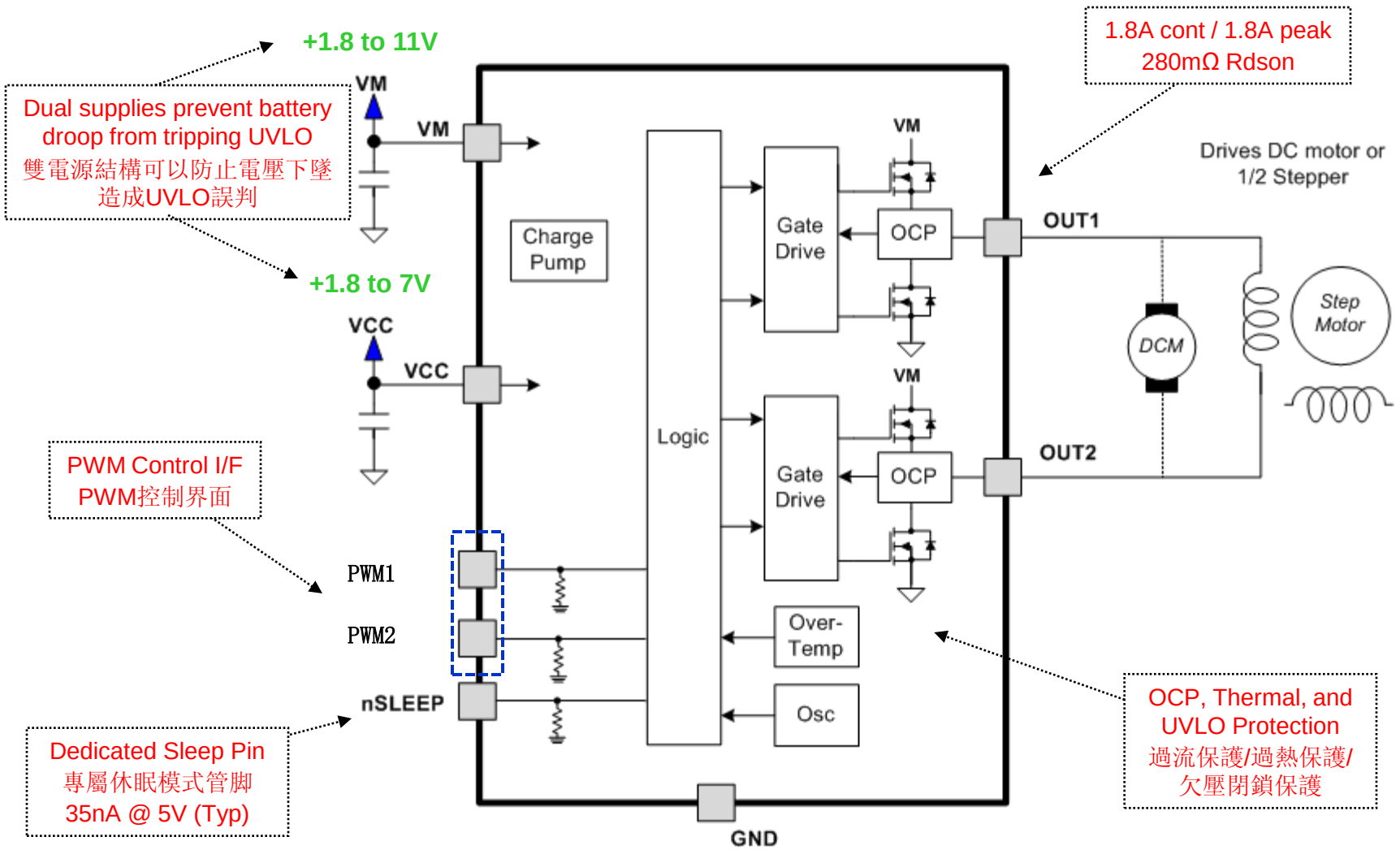

Selective Disclosure

Texas Instruments

DRV8837

1.8A Low Voltage Brushed DC Motor Driver/1.8A低電壓直流有刷馬達驅動器

Worlds smallest 1.8A Motor Driver (2 x 2 mm)
世界上最小的1.8A馬達驅動器（2×2mm）

Ultra low RDSON (140mR per FET)
超低的RDSON (140mR per FET)

Ultra low sleep current (35nA)
超低的休眠電流 (35nA)

Fully Protected
全面保護

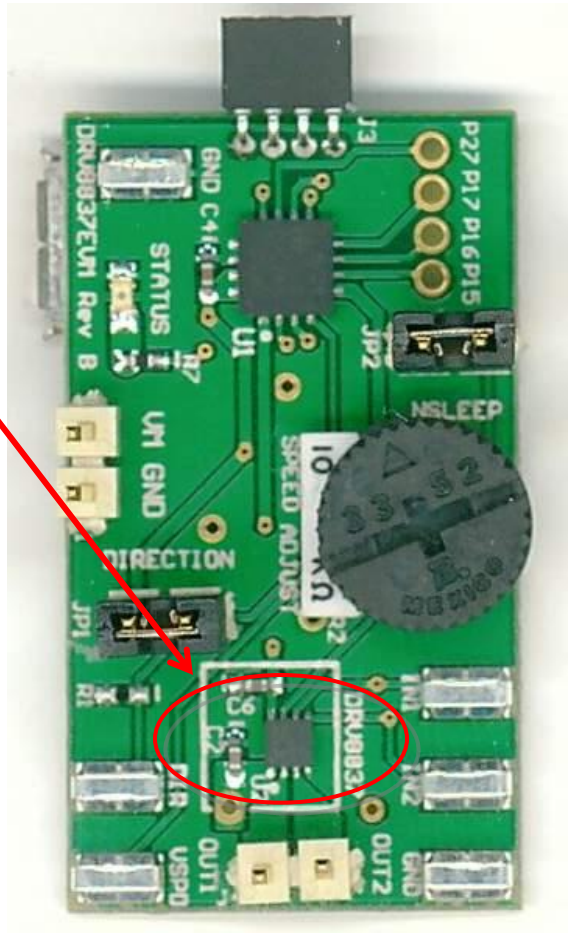

Over Current Protection
過電流保護

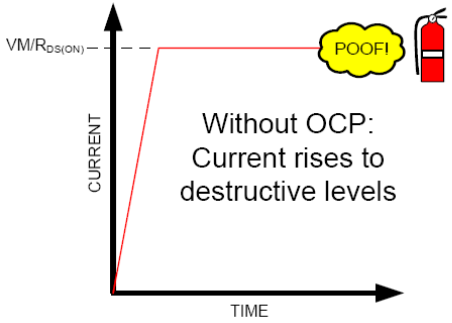

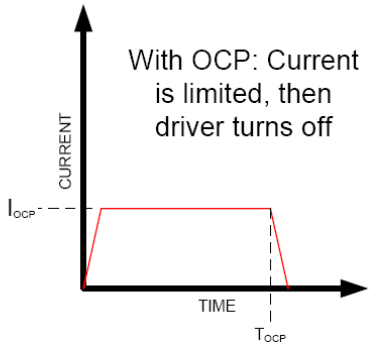

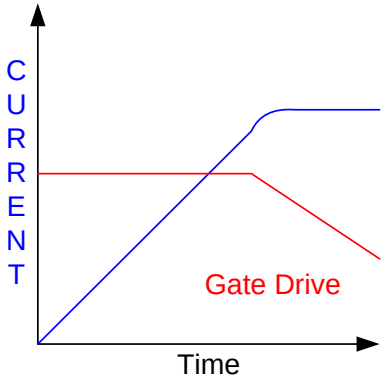

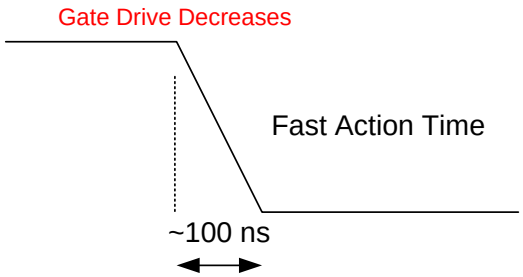

- Need to protect from damage caused by motor fault condition, e.g. short to GND, supply or across motor winding.

  與地、電源或線圈之間的短路等情況都需要過流保護。
- On Top of current regulation circuit, TI devices contain an extra protection called I_{LIMIT}.

  不同於電流調節電路，TI的產品一般都包括另外一個保護電路“I_{LIMIT}”。
- By decreasing FET gate drive, the FET DS resistance increases and current is limited.

  通過減小功率管的門極電壓，其源漏極電阻會增加，限制通過的電流。
- Each FET is protected individually and need to react fast enough without false-triggering.

  每個功率管都需要單獨的保護機制，同時需要能迅速對過流情況進行反應，又不能有誤判。

OCP realization (DRV88xx)
過流保護的實現 (DRV88xx)

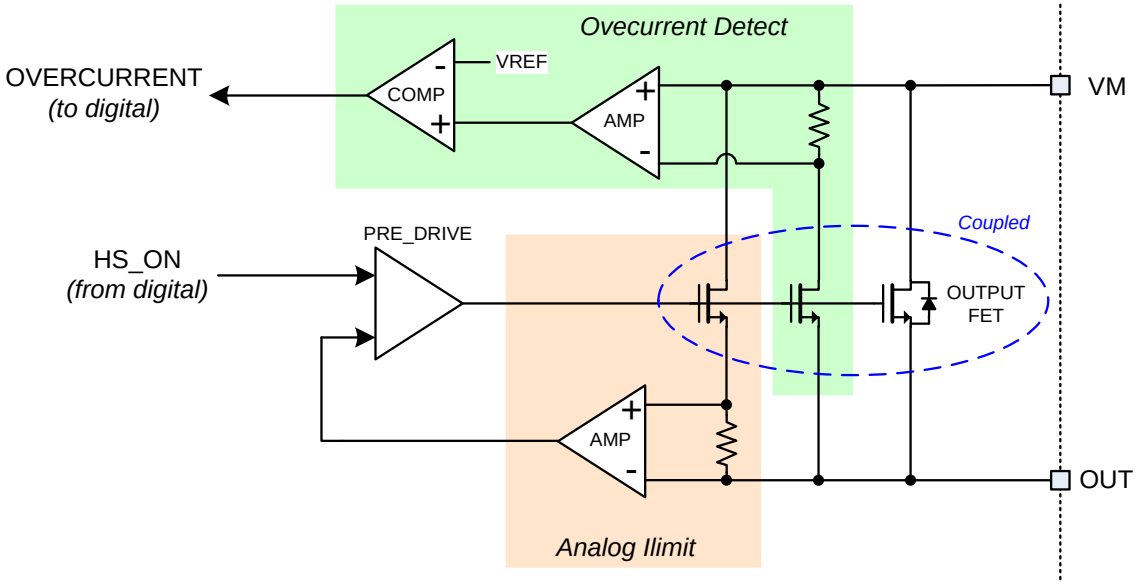

Analog OCP implementation (high side shown)

Key points/關鍵點:

Analog OCP consists of two portions/類比OCP包括兩部分:

- An analog current limit removes gate drive
  限流迴路移除門極驅動
- An over-current detection circuit monitors current and provides OC signal to digital core
  過流檢測迴路檢測電流並為數位控制核心提供過流訊號

Dead short on DRV88xx
DRV88xx完全短路

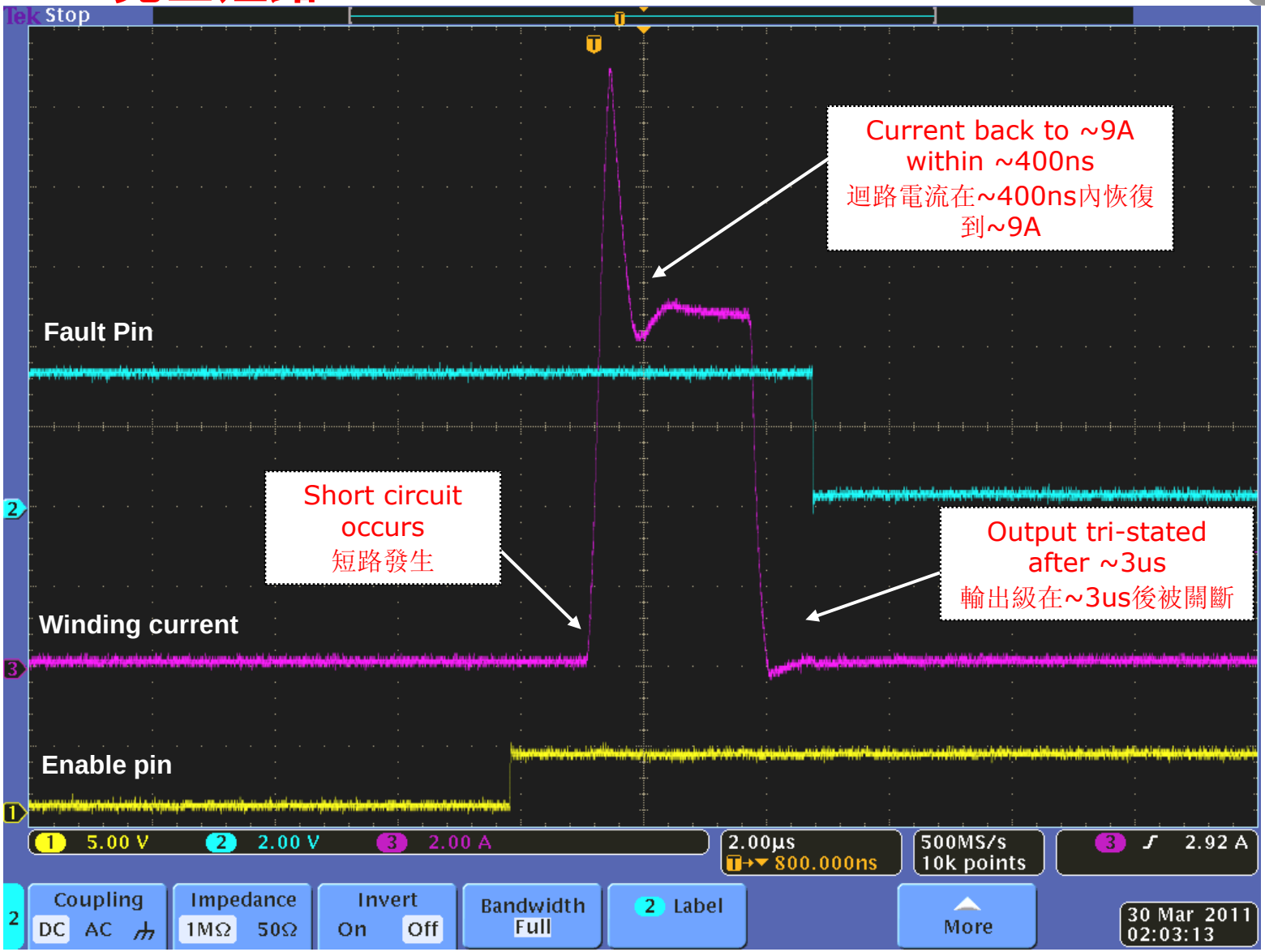

Selective Disclosure

Texas Instruments

UVLO/Shoot-through Protection
欠壓閉鎖/擊穿保護

更安全

- UVLO protection/欠壓閉鎖
  - Supply voltage level is constantly monitored and the device is tri-stated when the voltage level is too low to ensure proper control over the H-Bridge

    晶片自行持續監測供電電壓值，當電壓過低時輸出端被設置成高阻抗狀態，確保H橋接在正常運作狀態。
- Shoot-through Protection/擊穿保護
  - High side and low side onthe same half bridgeare never allowed to turn on at the same time. A small amount of delay (dead time) is insertedbetween high-side turning-off and low-side turning-on. The longer the dead time, the safer the operation but the worse the linearity and efficiency.

    同一個半橋的上低側决不允許同時打開！爲了避免此現象的發生，高側關斷和低側導通之間人爲的增加一段延時 (停滯時間)。停滯時間越長H橋接的運作越安全，但同時線性度和效率也越差。

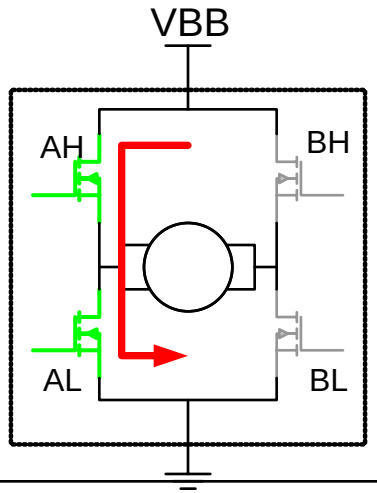

Shoot–through!!

Thermal Shutdown
熱關斷

- Excessive power dissipation, insufficient heat-sinking or a too high ambient temperature can lead to hazardous temp level.

  過度發熱、熱沉不足、環境溫度過高等都可能對晶片造成損害。

- Multiple thermal sensors are placed across the die, continuously monitoring temperature. When temperature reaches over-temp threshold, the H-bridge is tri-stated and indexer is reset, and a Thermal ShutDown (TSD) event occurs.

  晶片內部放置了多個熱感應器來持續監控溫度。當芯片溫度上升到過熱的閾值時，H橋接將被設置成高阻，微步進細分也被重置–熱關斷。

- Some devices offer a warning signal called Pre-TSD. A Pre-TSD event occurs at the TSD-XC temperature, where XC is a temperature offset such as 20C or 30C.

  有些產品在熱關斷之前可以先進行預判，預判溫度一般比熱關斷閾值低20～30C°。

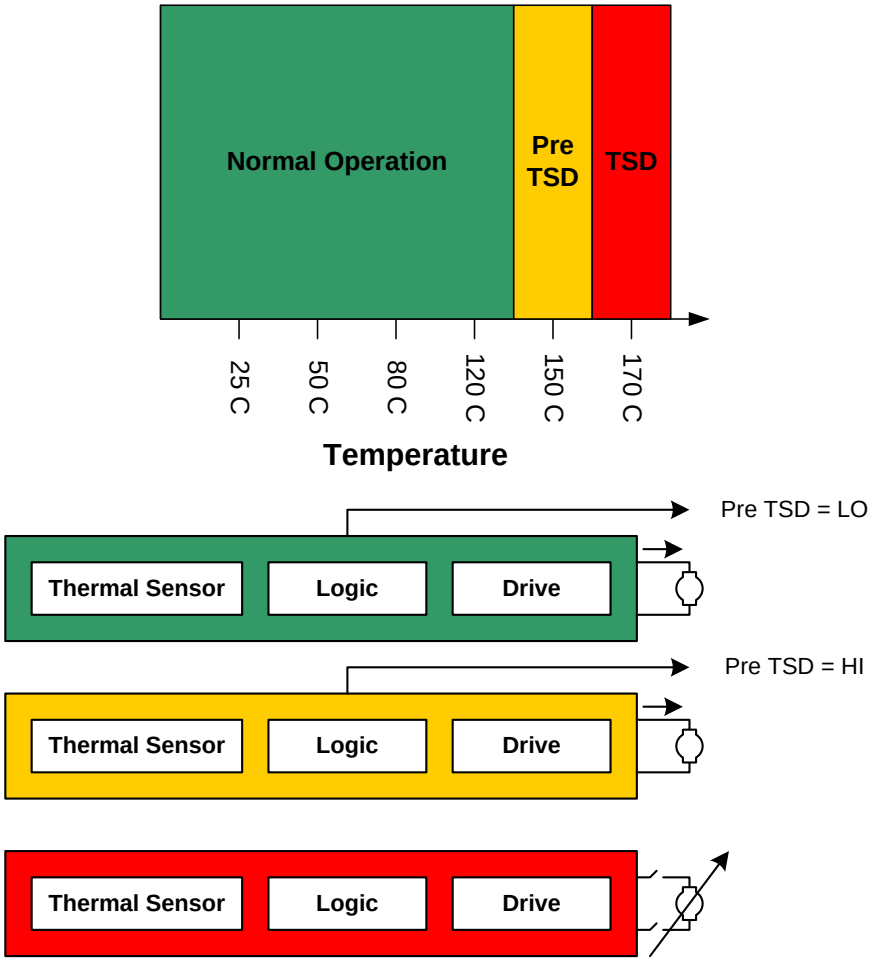

What's good about TI's motor drivers?
TI的馬達驅動產品有哪些優勢？

Advanced technology & low power dissipation
先進工藝 & 低功耗

更環保

Advanced tech: ultra-low RDSON
先進工藝之超低 RDSON

- High efficiency

  高效率

- Good thermal performance

  優秀的散熱性能

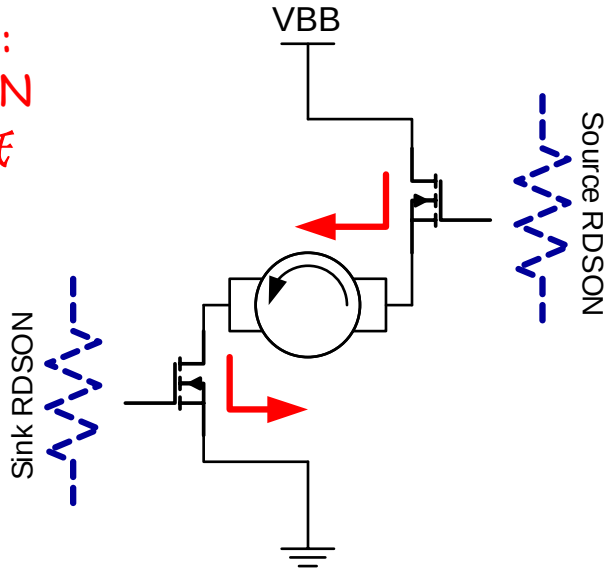

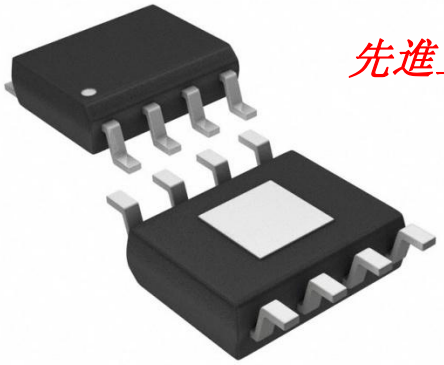

Advanced tech: thermal-efficient package
先進工藝之有效的散熱封裝

PowerPAD™: Exposed pad to remove heat

PowerPAD™:

通過裸焊盤散熱

Low power:
- RDSON
- Sleep mode
- Efficient PWM switching & dead time

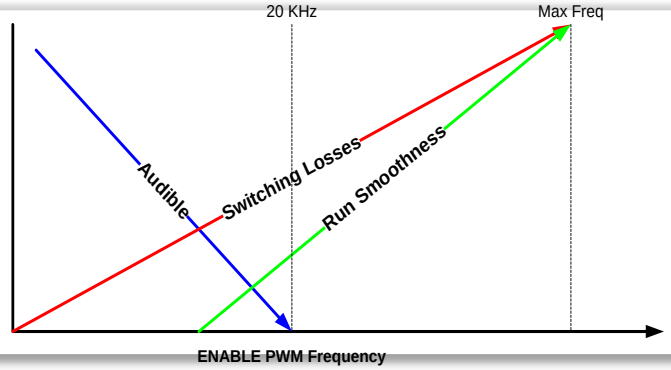

低功耗:
- RDSON
- 休眠模式
- 超高效的PWM和死區時間

DRV8837

1.8A Low Voltage Brushed DC Motor Driver/1.8A低電壓直流有刷馬達驅動器

更環保

Worlds smallest 1.8A Motor Driver (2 x 2 mm)
世界上最小的1.8A馬達驅動器（2×2mm）

Ultra low RDSON (140mR per FET)
超低的RDSON (140mR per FET)

Ultra low sleep current (35nA)
超低的休眠電流 (35nA)

Fully Protected
全面保護

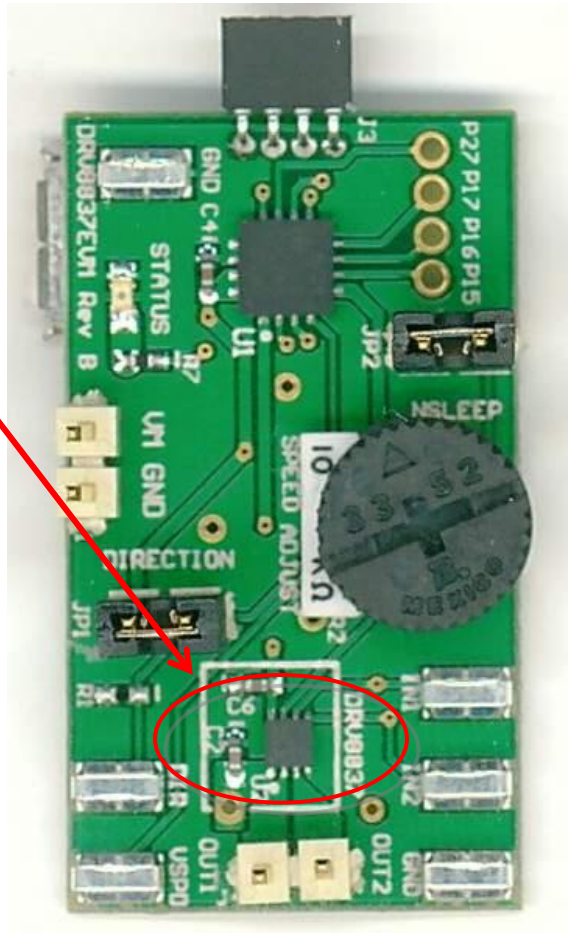

DRV8837: Excellent Thermal Performance:
DRV8837: 超好的散熱效能

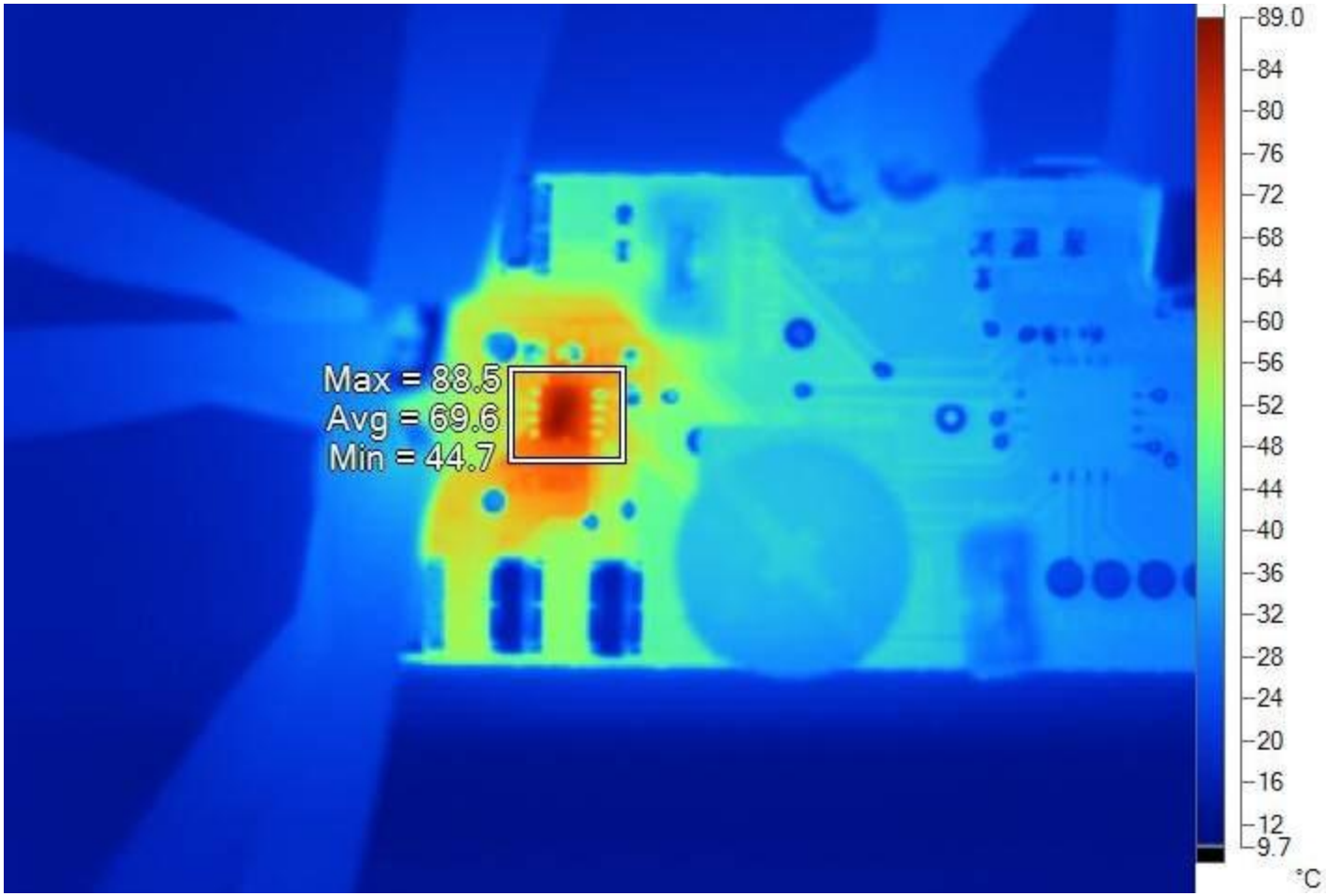

Max *case temp = 88.5°C @ 1.8A*

Selective Disclosure

Texas Instruments

DRV8818 – 2.5A Stepper Motor Driver (with On-Chip 1/8 µ-Stepping Indexer)
DRV8818 – 2.5A 步進馬達驅動器（內建整合 1/8 細分索引）

Features

- Dual H-Bridge stepper motor driver
  - Supply voltage: 8~35V
  - Output current: 1.75A RMS / 2.5A peak per winding
- P2P upgrade to DRV8811 with lower Rdson (0.37Ω HS+LS)
- On-chip indexer supports up to 1/8 micro-stepping
- Programmable mixed (fast + slow) decay mode
- Integrated protection features including over-current, thermal, shoot-through and UVLO protection
- P2P replacement for competitors, and runs up to ***30%*** cooler.

特性

- 雙H 橋接步進電動驅動器
  - 供電電壓: 8~35V
  - 輸出電流: 每繞組 1.75A RMS / 2.5A 峰值
- DRV8811的接腳相容升級版，Rdson 更低 (0.37ΩHS+LS)
- 內建索引支援最高1/8細分
- 可程式的混合電流衰變（快速衰變+緩慢衰變）模式
- 包含過電流、過熱、擊穿與欠壓封鎖等整合保護特性
- 可接腳兼容代替其他公司的一些產品，同時運行溫度要低超過30%

Applications/應用範圍

- Printer/印表機
- Scanner/掃描機
- Textile Machinery/紡織機械
- Positioning & Tracking/定位 & 追蹤
- Factory Automation/工廠自動化
- Robotics/機器人技術

9.7 x 6.4mm, 28-pin HTSSOP package

9.7 x 6.4mm, 28腳 HTSSOP封裝

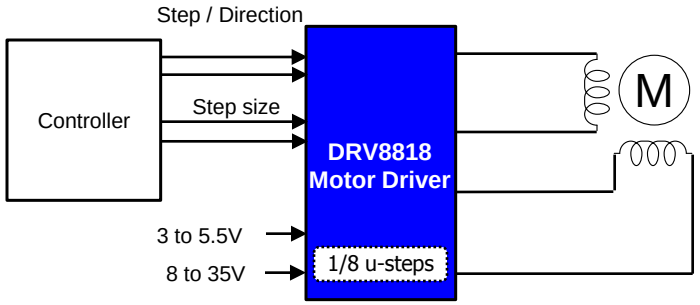

1/8 Micro-Stepping
1/8細分微步進驅動

Selective Disclosure

Texas Instruments

更環保

DRV8818 – The Coolest 2.5A µStepping Motor Driver
DRV8818 – 溫度最低的細分步進馬達驅動器

Greater than 30% temperature reduction

Pin to pin compatible drops into existing layout!

相比其他互相接脚兼容的產品，DRV8818的溫度要低過30%!

Max Temp 107°C

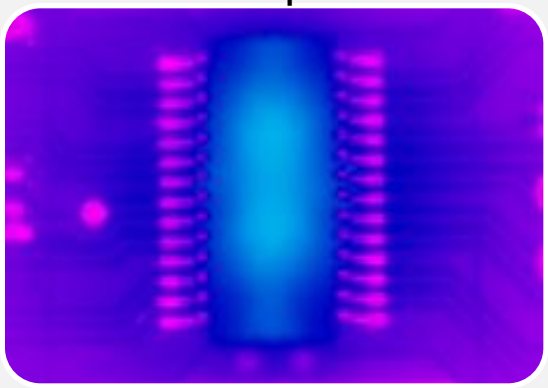

TI - DRV8818

Max Temp 130°C

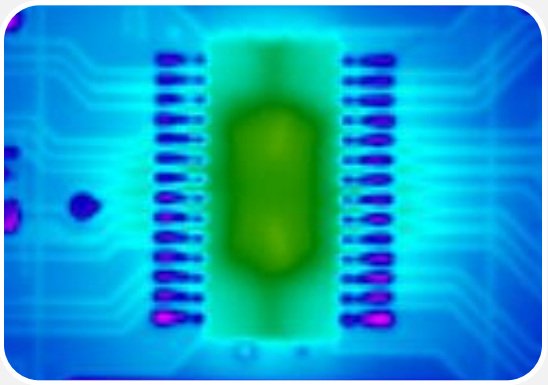

Competitor 1

Max Temp 157°C

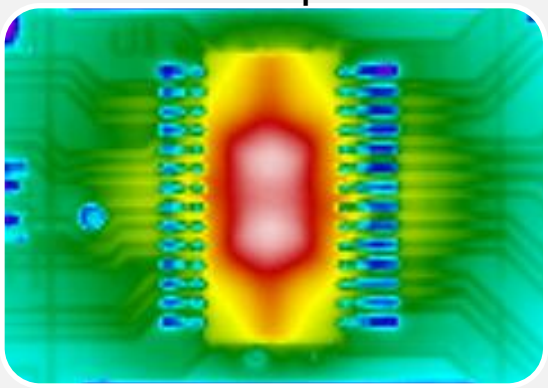

Competitor 2

2.5A sine wave peak, 1/8 micro-stepping, 2-layer board

What's good about TI's motor drivers?
TI的馬達驅動產品有哪些優勢？

Advanced algorithm: Motor Lab @ Kilby
先進算法: Kilby 馬達實驗室

更智能

- New motor technology/algorithms
  新的馬達驅動算法
- Real world applications
  工業界的現實應用
- Working closely with Universities
  與大學緊密合作

Selective Disclosure

DRV8818 µStepping Current Waveform Example
DRV8818微步進細分電流波形範例

Full stepping
全步步進

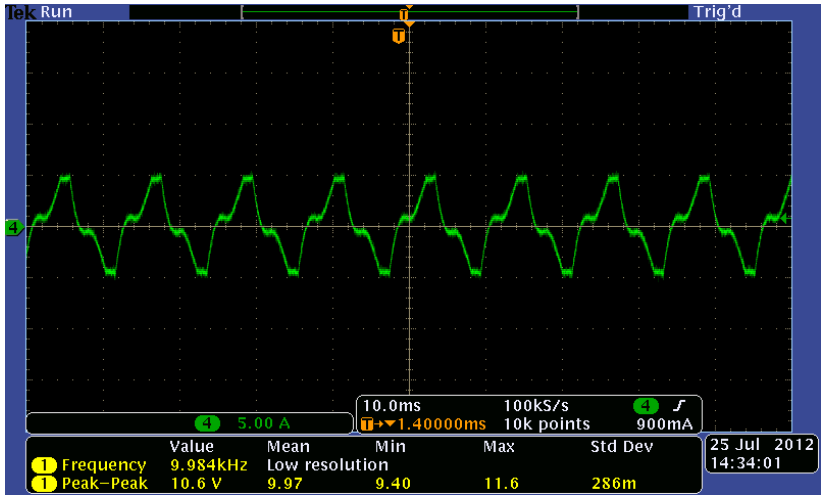

1/2 µ-stepping
1/2細分

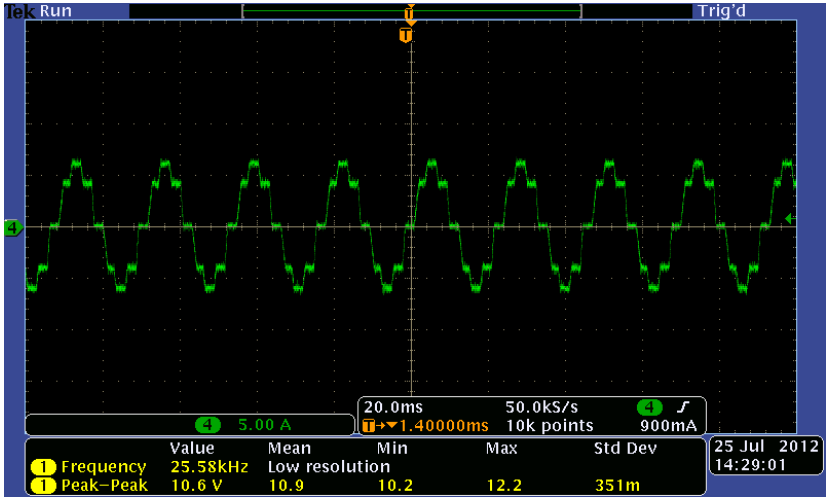

1/4 µ-stepping
1/4細分

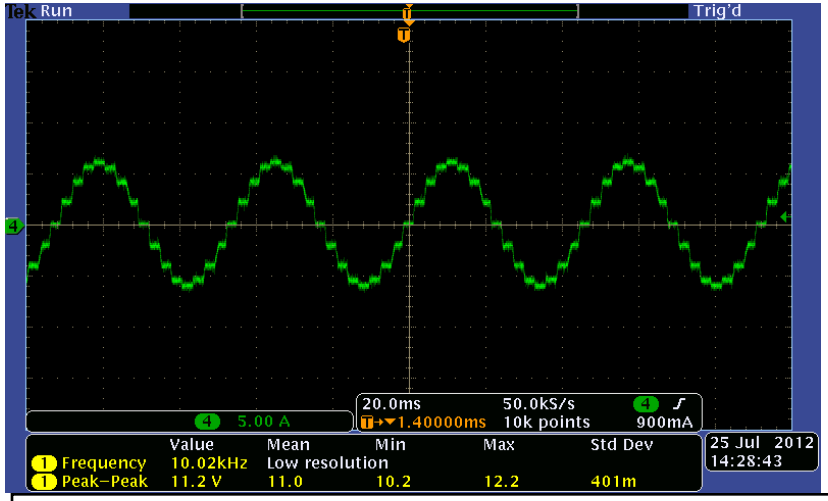

1/8 µ-stepping
1/8細分

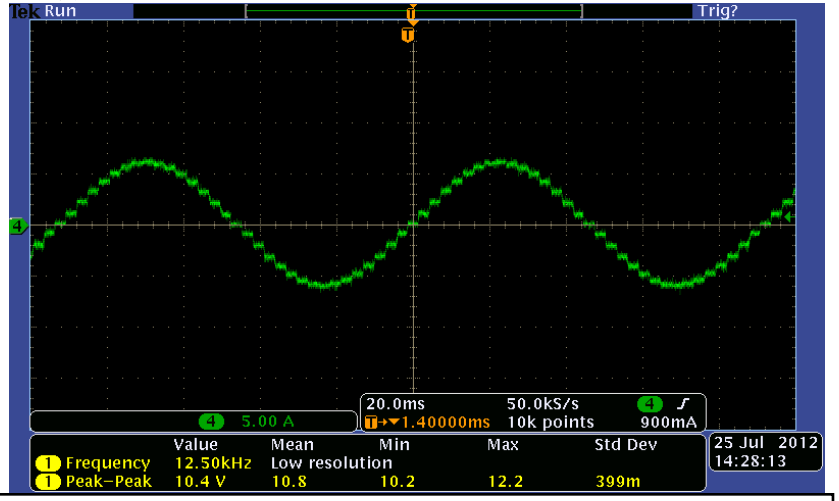

Selective Disclosure

Texas Instruments

DRV8834: 2.2A Low Voltage Stepper Motor Driver with 1/32 Indexer
DRV8834: 2.2A低電壓內建整合1/32細分索引步進馬達驅動器

更智能

Competitor: A

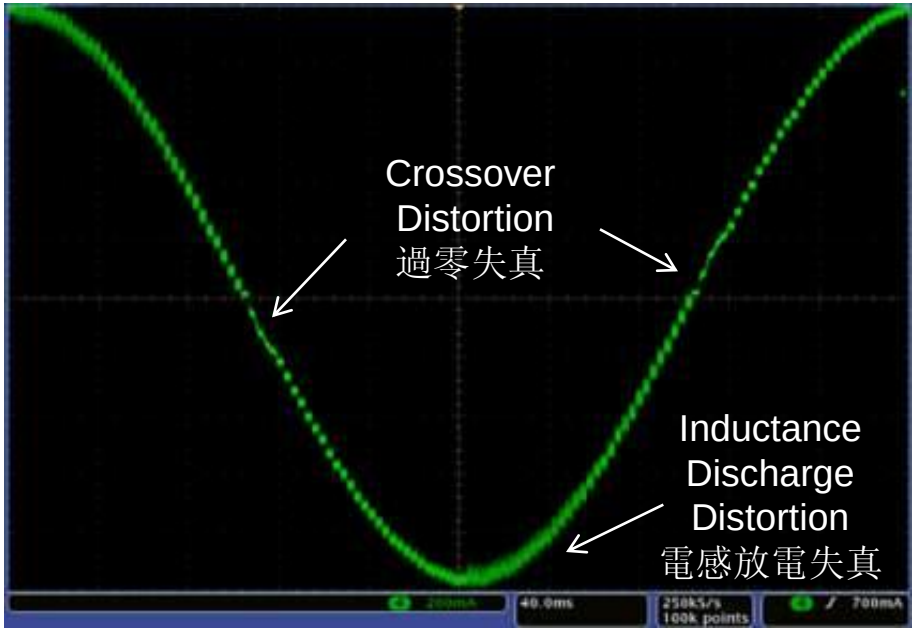

DRV8834

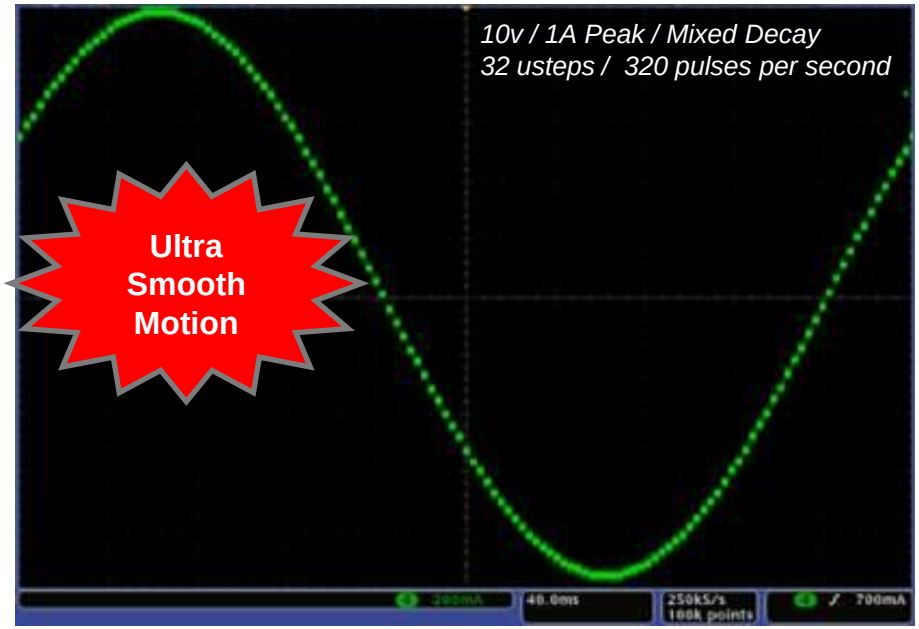

Less Distortion → Less Torque Ripple → Smoother Motion

- Dynamic TBLANK minimizes crossover distortion
- Variable Mixed Decay Ratio minimizes discharge distortion

更小的失真 → 更小的轉矩漣波 → 更平滑的馬達運轉

- 動態消隱時間最優化過零失真
- 可變混合電流衰減比例最優化放電失真

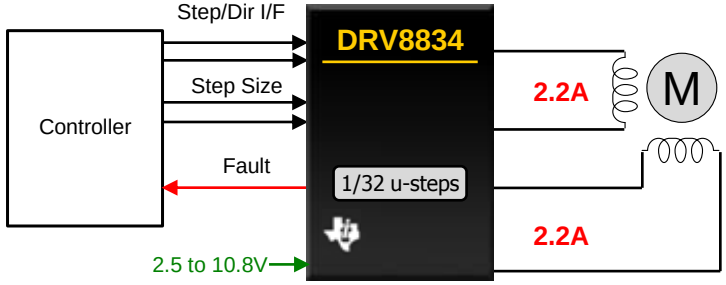

Selective Disclosure

Texas Instruments

DRV10866

5V 3-Phase Sensor-less BLDC Fan Driver
5V 3相 無刷 無感測器 集成馬達驅動器

更智能

FG輸出 可用於閉環控制

$$RPM = \frac{(FG \times 60)}{pole\ pairs}$$

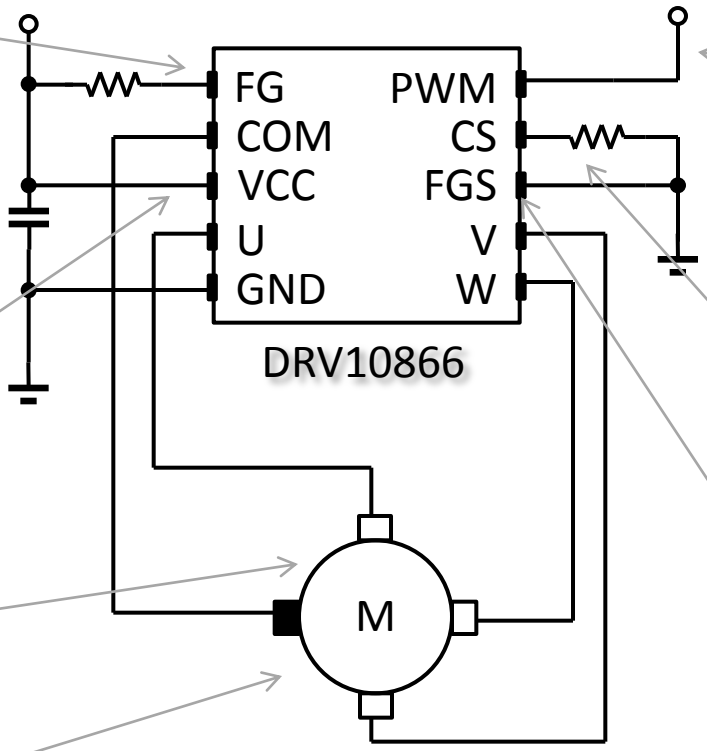

15k to 50kHz PWM速度控制輸入
拉低保持500us => 5uA休眠模式

VCC protected from spikes during rotor lock / when in standby
進入堵轉保護時，抑制VCC尖峰產生

$$iLimit = \frac{3120}{Rcs(\Omega)}$$

No high-wattage current sensing resistor needed
無需大功率電流檢測電阻

Rotor Stall / Lock protection
鎖定（堵轉）保護

Tie FGS to VCC for ½ FG frequency
FGS連接到VCC可得到½ FG頻率

500mA輸出電流
156kHz PWM Switching

150° Driving Phase current
驅動相電流波形

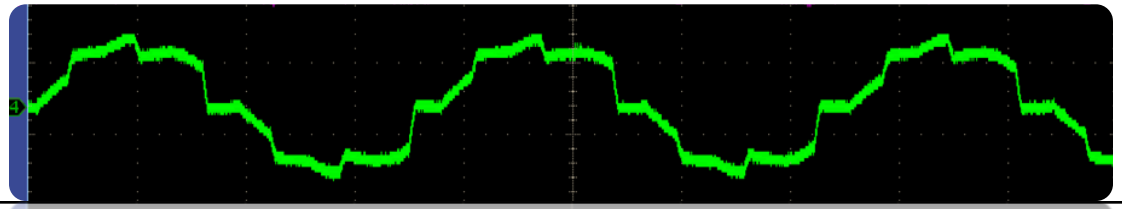

TEXAS INSTRUMENTS

3-Phase BLDC Motor 180° Driving Technology
三相無刷直流馬達180°驅動技術

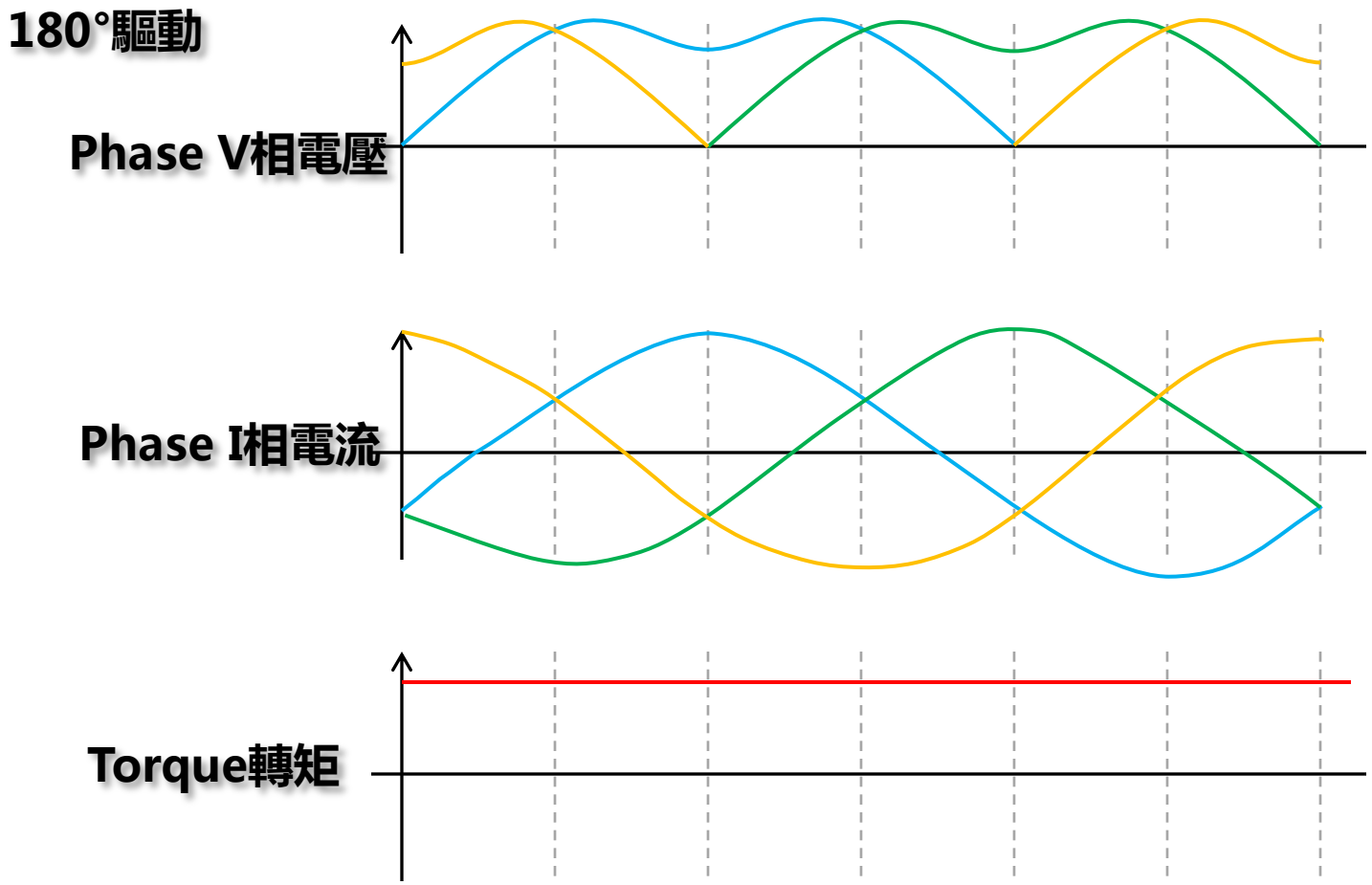

Quicker Time to Spin!

DRV8312-C2-KIT 3-Phase Brushless Motor Drive and Control

更智能

Features:

- Software Support:
  - Field Oriented Control (sensorless)
  - Trapezoidal (sensored & sensorless)
  - InstaSPIN support
- Speed & torque control loops
- Piccolo + DRV8312 *(3.5A RMS / 6.5A peak / 50V)*
- Kit includes motor w/ hall sensors, power supply, and USB stick with Quick Start GUI and guide.

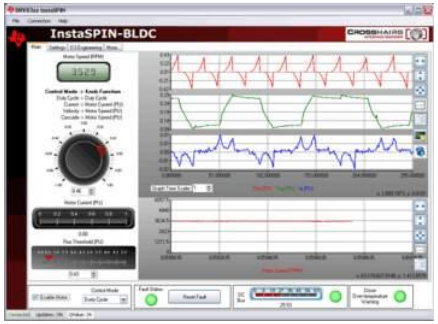

In Stock / In Production
Order Now!

Fully supported/支持完善

更智能

Eval-kits
開發套件

- Total solution. Drop in and Spin.
  完備的解決方案，即插即轉。
- Fully open resources. Easy to apply.
  完全公開的檔案，易於申請。

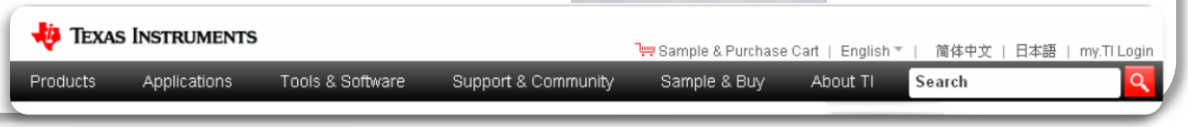

Online support
線上支持

- Website/官網：www.ti.com/motors
- Online community/線上社區：e2e.ti.com

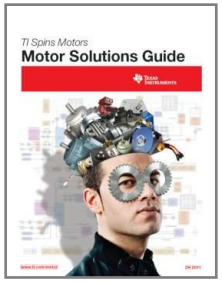

Supporting team
技術支持團隊

- Taiwan FAE: Bruce LIU/劉俊男 (Taipei/台北)
- Motor Application Team: TANG Zhao/唐釗 (Beijing/北京)

  Wilson ZUO/左巍 (Beijing/北京)

TI WW manufacturing footprint
持續供貨的保障:遍布全球的工廠
U.S., Asia and Europe

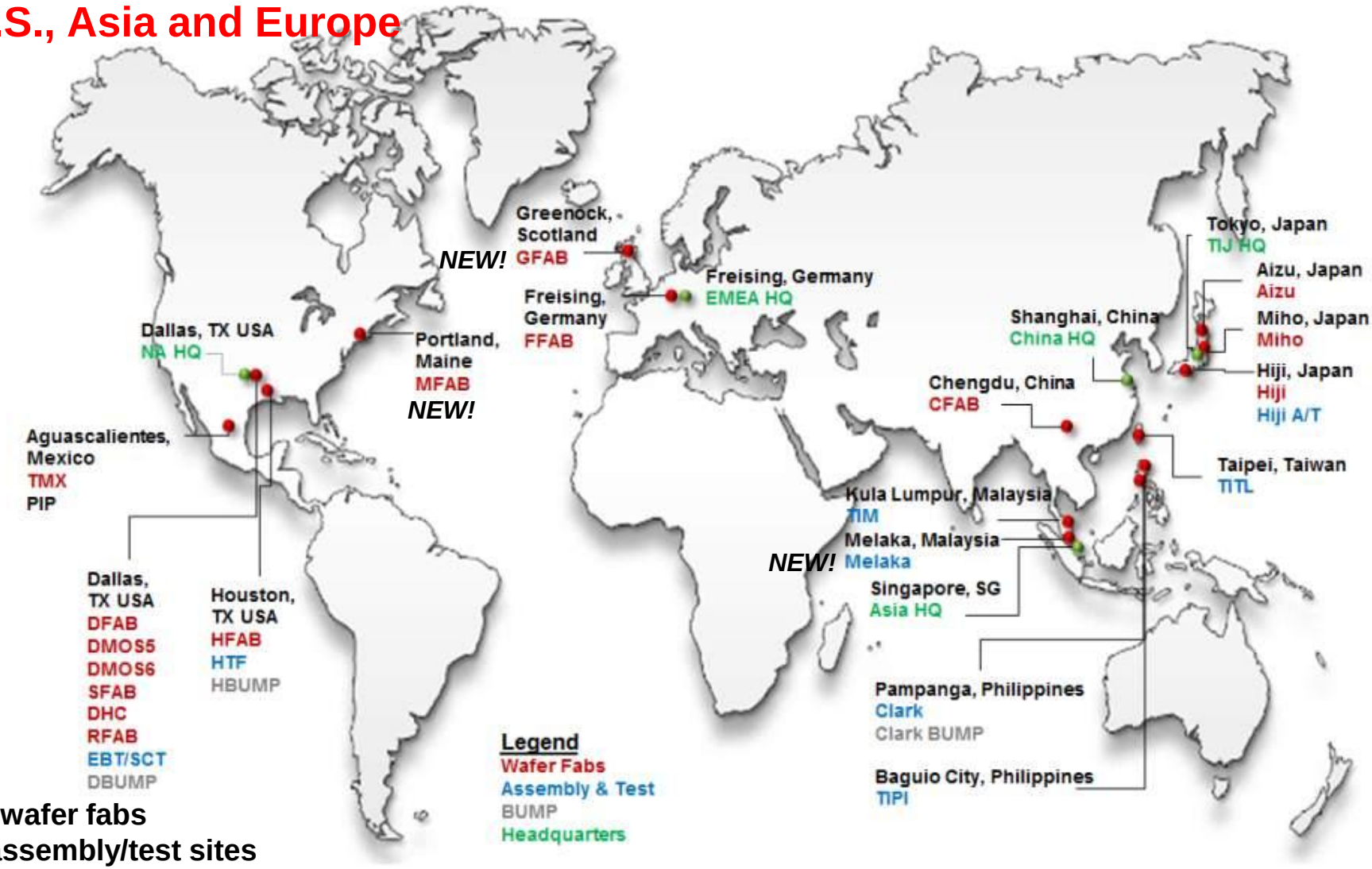

11 wafer fabs
7 assembly/test sites
3 bump facilities

Map shows internally owned capacity

Complete Product Family
完整的產品陣容

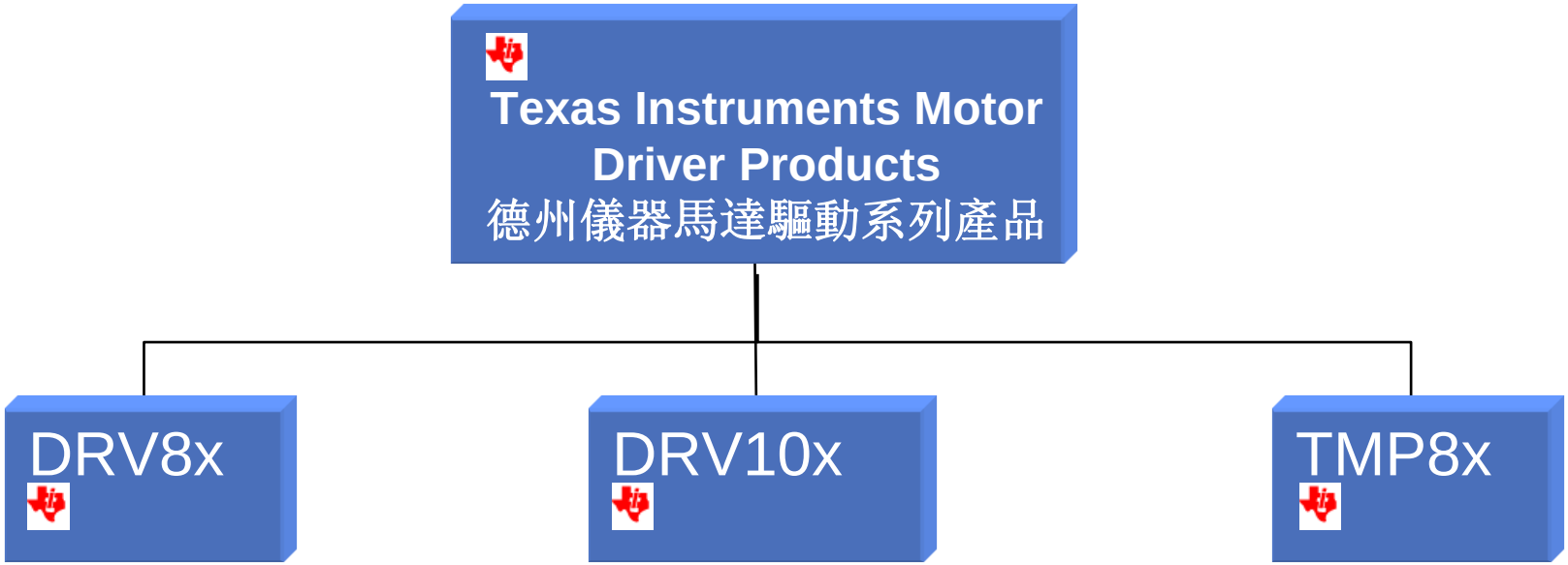

Powerful Analog Motor Driver
Highly Integrated BLDC Motor Pre-Driver
功能強大的類比馬達驅動器
類比整合的無刷直流馬達驅動器
馬達驅動器
馬達驅動器

Analog Motor Driver: DRV8x
類比馬達驅動器: DRV8x系列

Stepper Motor Drive
步進馬達驅動

- 1.8V~60V; 0~12A
- High Count µ-Stepping Indexer 高細分微步進索引
- Current Regulation / Control 電流調節/控制

Open Loop Control
開放迴路控制

Brushed DC Motor Drive
有刷 DC 馬達驅動

- 1.8V~60V; 0~24A
- Inrush Current / Stall protection 突波電流 / 停止保護

Simplicity & Low Cost
易設計，低成本

3-Phase BLDC Motor Drive
三相 BLDC 馬達驅動

- 8V~60V; 0~13A
- Integrated current sense amps / buck 整合電流感應放大器 / 降壓
- Pre-drivers & drivers (w/ integrated FETs) 前置驅動器/ 整合 MOSFET

Reliability & Efficiency
可靠、高效

DRV10x/TMP8x Integrated BLDC Motor Driver (NDA Required)
DRV10x/TMP8x系列整合無刷直流馬達驅動器 (需簽NDA)

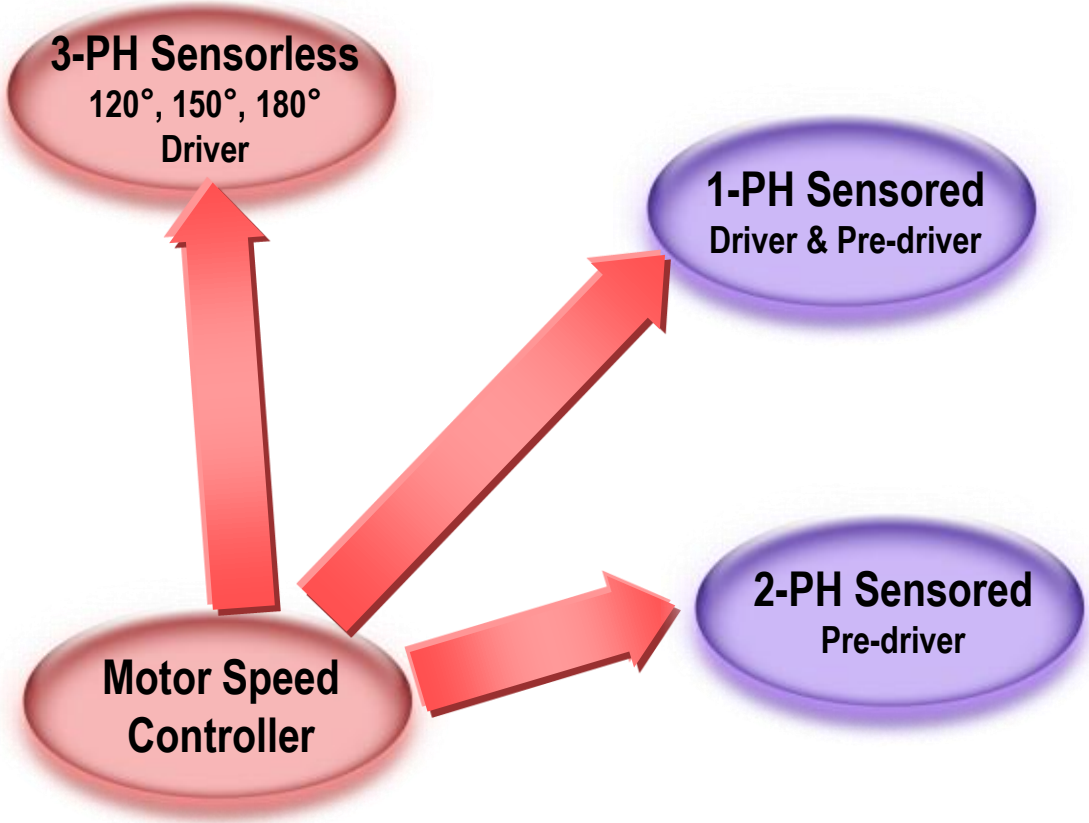

Success story/成功案例：24V Motor Application

Printers
STP：Sheet Feeder / Scanner
DCM：Paper Cutter, Stapler, Sheet Lifter

ATM / Cash Resistor
STP：Bill / Receipt Sender, Receipt Printer Head
DCM：Paper Cutter, Cover Opener

Sewing Machine
STP：
Textile Feeder
Thread / Needle

Vending Machine
STP：Feeder (Ticket, Drink)
DCM：Feeder
(Bill Senders are supplied as a Module)

Slot Machine
STP：Reel Rotator
DCM：Coin Hopper
(Bill Senders are supplied as a Module)

Time Recorder
DCM：Card Feeder
Printer Head

Automation
STP：Robot

Selective Disclosure

Success story/ 成功案例：3 ~15V Motor Application

Label Printer
STP：Paper Feeder
DCM：Paper Cutter

Projector
STP：Auto Focus
Zoom, Iris, Lens shift

Toy R/C, Toy Robot
STP：Joint Control
DCM：Drive / Wheel Control

Security Camera
STP：Lends AF, Zoom, Tilt

Vacuum Cleaner
DCM：Auto Filter Cleaner

Air Conditioner
STP：Auto Filter Cleaner

Refrigerator
STP：Flow Adjuster
DCM：Ice Maker

POS / Card Terminal
STP：Paper Feeder
DCM：Paper Cutter
(Cash Drawers are supplied as a Module)

Selective Disclosure

For More Information:

Motor Solutions Home Page: www.ti.com/motor

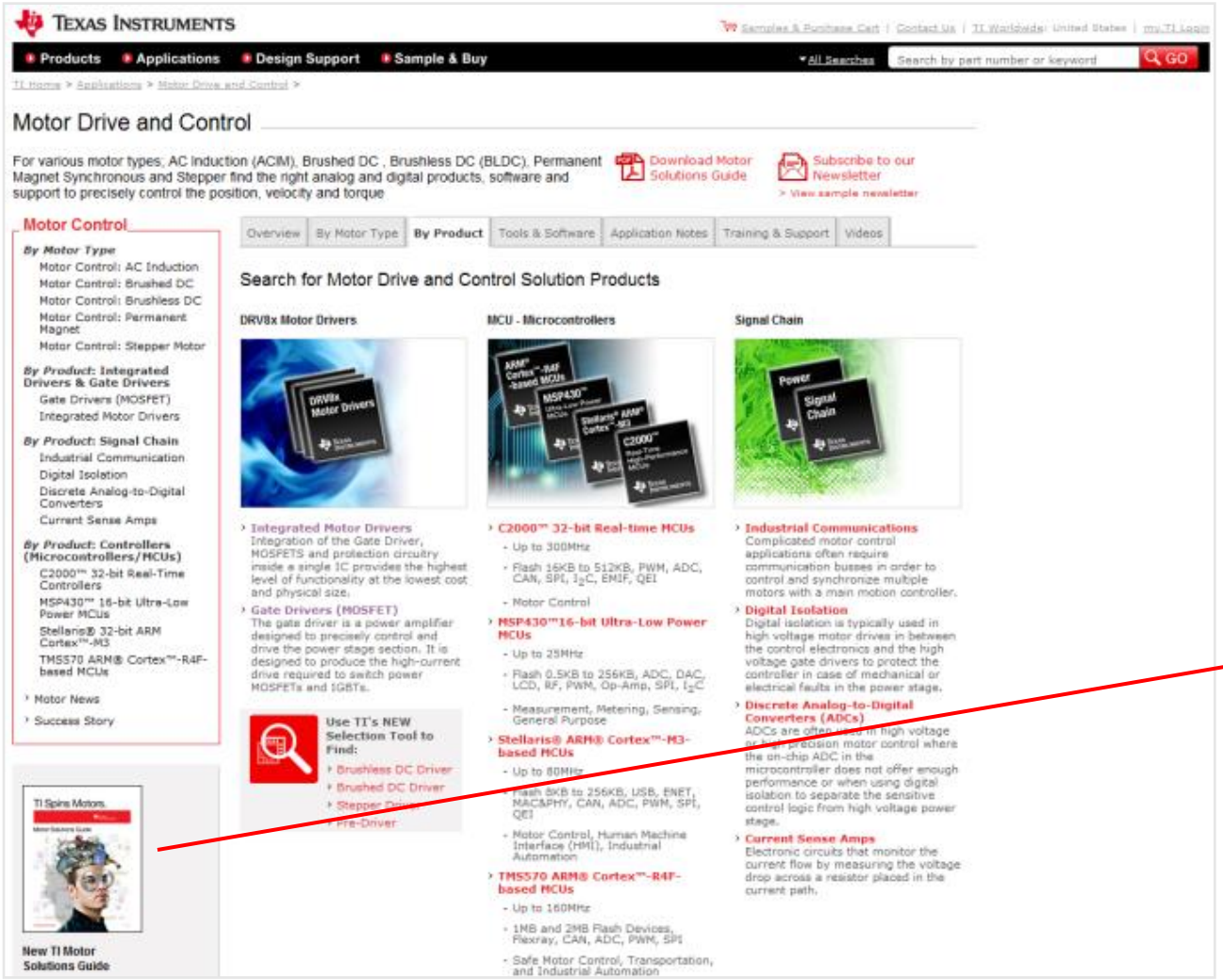

Motor Solutions Guide

Selective Disclosure

Texas Instruments

For More Information:

E2E Forum

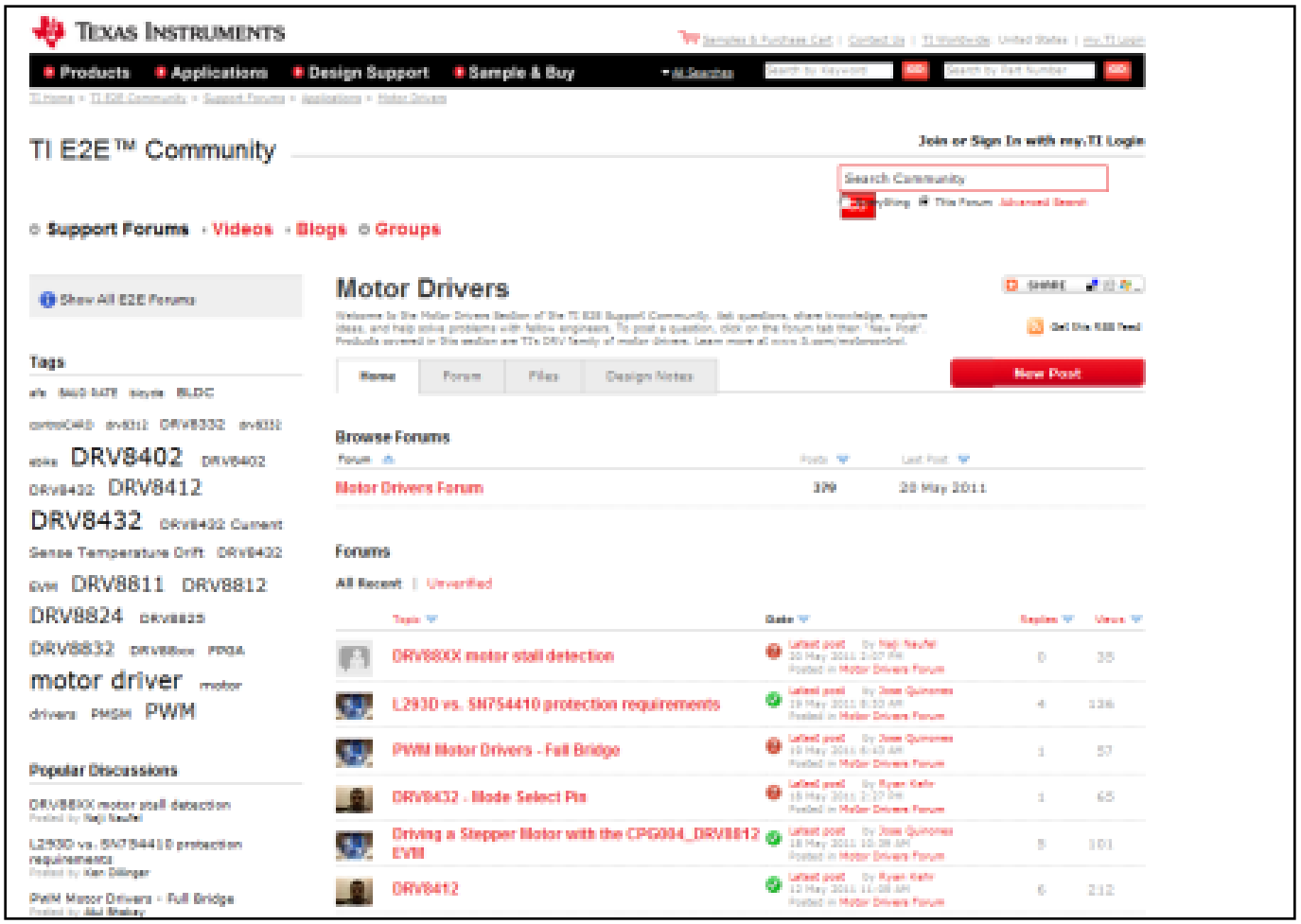

http://e2e.ti.com/support/applications/motor_drivers/default.aspx

Thank You!!
感謝大家！！

TANG Zhao/唐釗
Motor Application Team/馬達應用團隊
Office/電話：(86 10) 5902 9130
Email/電郵：zhao.tang@ti.com

TI Spins Motors

Texas Instruments

Smarter. Safer. Greener.